Hop 1070 Flush Lift

To suit 3" curved Lath

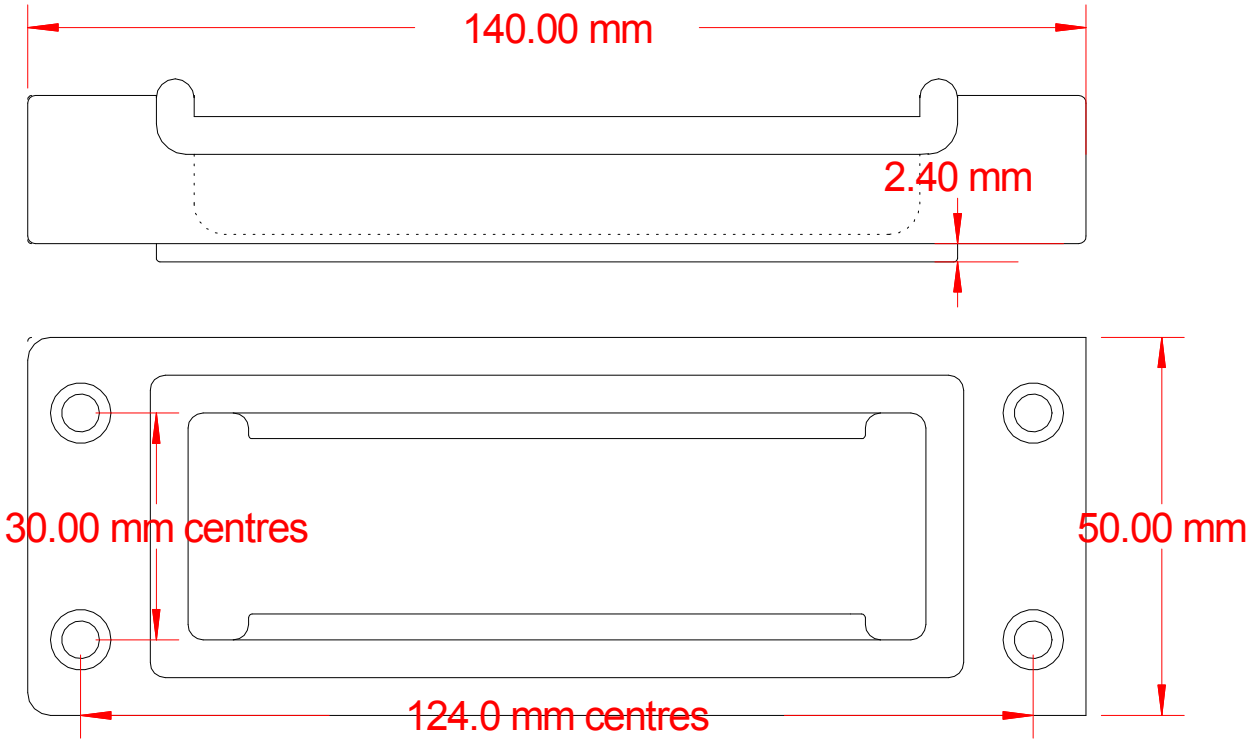

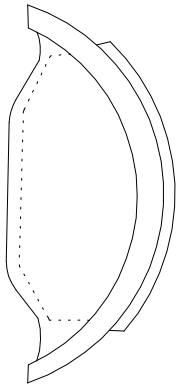

HOPKINS

THIS DOCUMENT IS THE PROPERTY OF HOPKINS BLIND & SHUTTER FITTINGS LTD. THIS DOCUMENT AND ANY INFORMATION CONTAINED HEREIN MAY NOT BE REPRODUCED, USED OR DISCLOSED TO ANY THIRD PARTY WITHOUT THE EXPRESS WRITTEN PERMISSION OF THE OWNER.

Malleable Iron

To suit 3" curved lath

Title: Hopkins Blinds Cast Flush Lift		
Drawing No.: Hop1070	Revision: A	Scale: NTS
File: \\HOPDC00\Documents\Drawings\Alex\WH075S.SKF		
Drawing Status: PROD	Drawn By: BA	Approved By:
	Date: 22/05/13	Date:
Notes:		