Size 3 & 4 fittings

No.729/3 JAMB HINGE
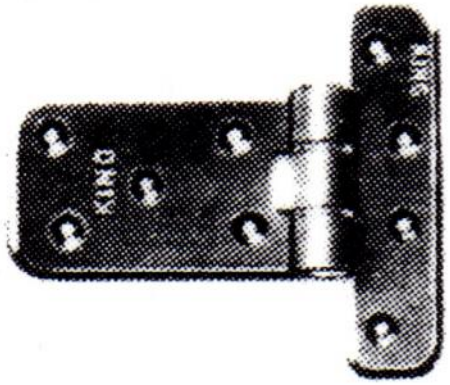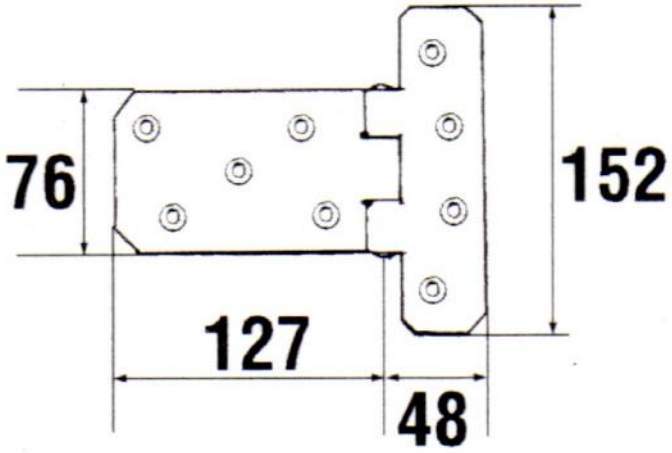
Comprises malleable hinge parts No.726/728 fitted with steel hinge pin. May also be used in lieu of butt hinges at jambs.